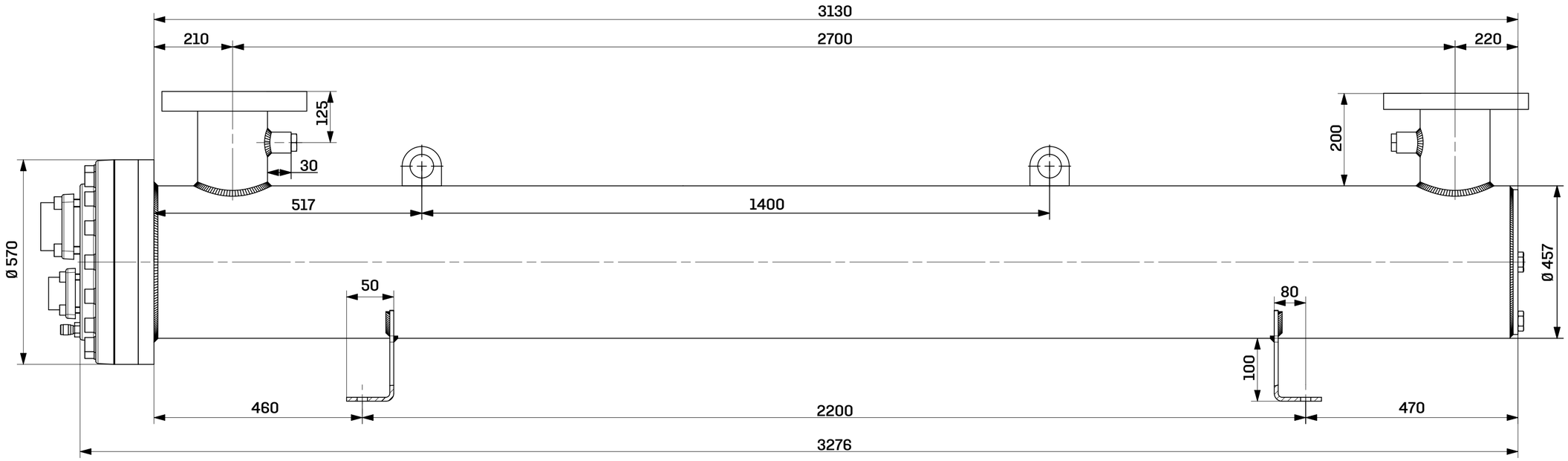

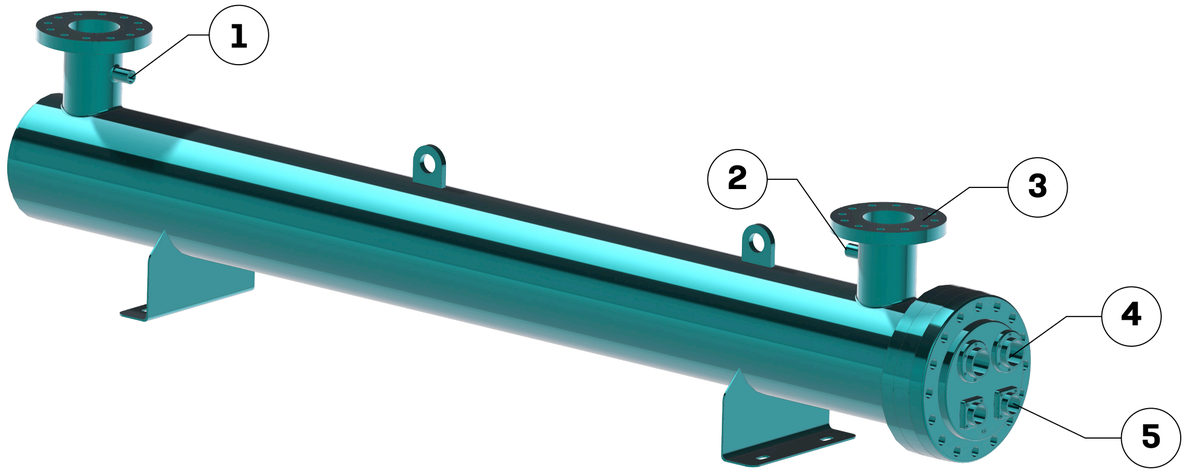

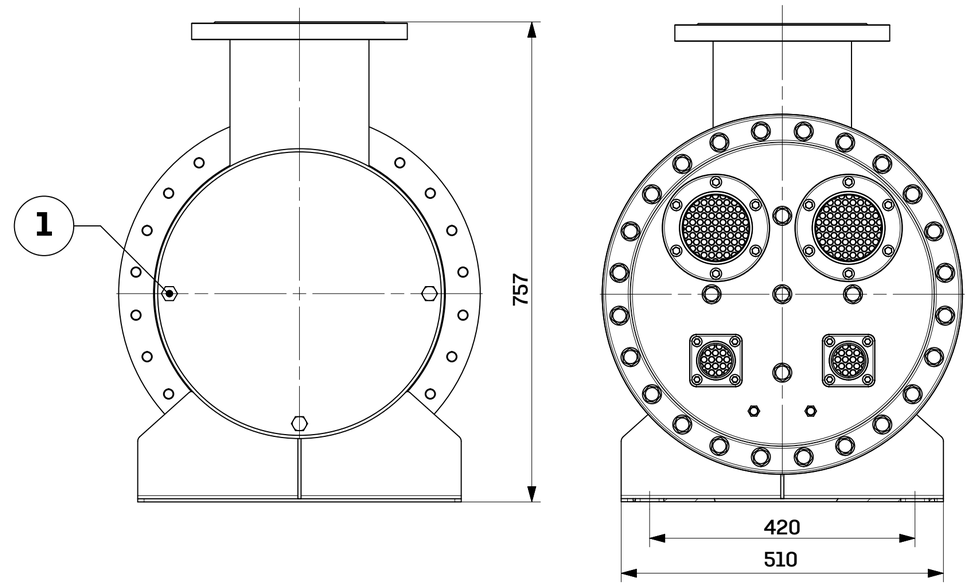

Part No	Part Specification (Parça Özellikleri)	Dimensions (Ölçüler)
1	Sensor Input (Sensör Girişi)	-
2	Extra Sleeve (Ekstra Manşon)	G 1/2"
3	Inlet/Outlet (Giriş/Çıkış)	DN200 PN16
4	Gas Outlet (Gaz Çıkış)	Ø105
5	Gas Inlet (Gaz Giriş)	Ø54

EKİN ENDÜSTRİYEL

	Name	Date	Revision Text
Designed By	İsmail Mert GENÇ	21.06.18	Changed Technical Drawing
Controls By	Atakan ULUBAY	21.06.18	Revision No/Date
Approved By	Serkan BATMACA	21.06.18	0-02/18.07.2018

MIT

Part Name: **MIT-BED1250** **A3**